CALDO 40" x 20"

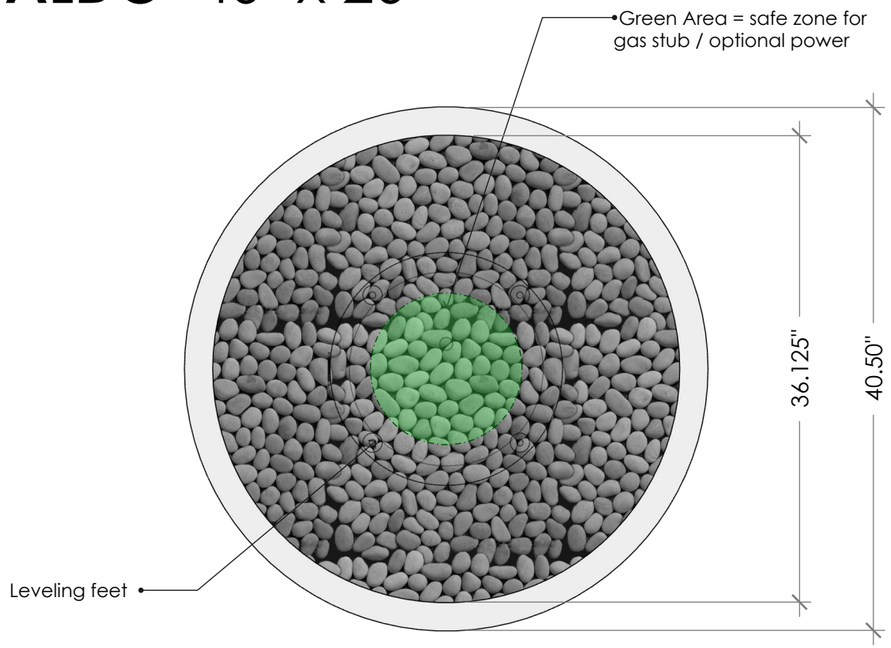

TOP VIEW

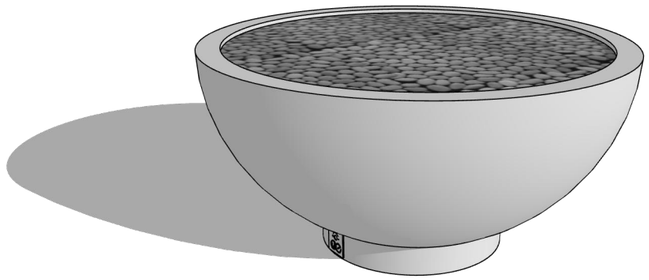

PERSPECTIVE VIEW

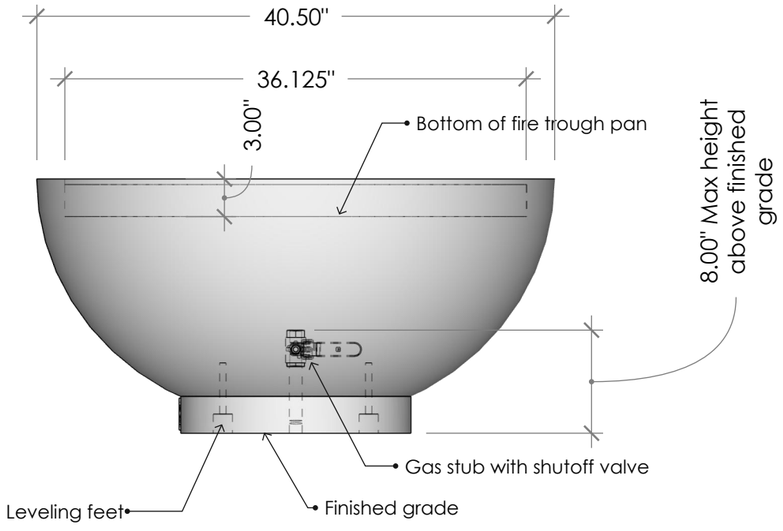

FRONT VIEW

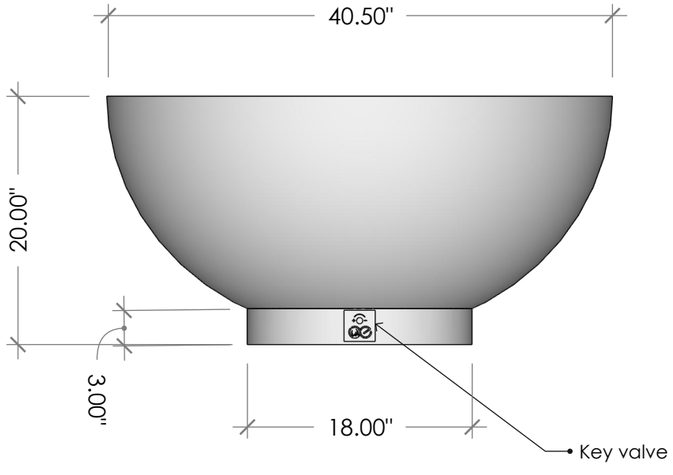

SIDE VIEW

NATURAL GAS AND OTHER REQUIREMENTS (to be completed before installation):

- 4 oz. natural gas pressure

- Gas shut off valve at stub

- Gas stub must be located within green zone as shown.

- Gas stub/shut off valve must be 8" or less above finished grade.

- Gas supply must be live at time of installation in order to test for functionality and leaks.

- If unit includes an electronic ignition or accent lighting, an electrical outlet with bubble cover must be installed within green zone as shown. We do not recommend installing a GFCI outlet with reset button under the fire pit. If you need to reset the circuit, you will need to remove all fill material and burner pan to access the reset button. Please see supplemental sheet for details.

- Fire pit must be placed on solid (compacted) ground or finished hardscape (pavers, concrete, etc.).

- Please note that units made from rusted steel will likely stain adjacent hardscape surfaces.

- Please ensure that workers have good access to installation site (clear path from the street and entry through gates, etc.).

When the above preparations are completed, standard installations include the following:

- Delivery and placement of unit, including leveling

- Connection of fuel lines (and power if needed) - plastic piping must be terminated to IPS threads prior to our team arriving to install the fire pit. We do not terminate plastic gas piping.

- Testing for leaks and overall functionality

- Placement of fill material (lava or fire glass)

- User training, if desired

* Outdoor Elements guarantees the fire pit will arrive in perfect condition. We are not responsible for any damage occurring after delivery and/or installation. Treat the fire pit like fine furniture, do not allow other contractors to use it as a workbench, etc. If it is to be installed before other landscaping work is completed, we recommend covering and protecting the unit until all surrounding work is completed.

** If site is not ready as described above and a second trip is required, an additional fee may be applied.

SPECS & SITE PREP DETAILS

BURNER:
30" Penta - Torpedo

BTU RATING:
300,000 BTU

WEIGHT (without fill):
Aluminum - 81 lbs

RECOMMENDED FILL:
Tumbled lava - 182 lbs
Fire glass - 153 lbs

v1.0-2026

outdoor elements